solids and the consistency of solids to be handled. For handling large-size solids, the impellers are also designed with fewer vanes. Pumps with fewer vanes in the impeller would however have less efficiency.

In the case of high head pumping, the total head is shared by more than one impeller in the multi-stage pumps. With very high head, for a single-stage pump the specific speed may become less than 40 and in turn so low that even the radial flow design would be too narrow. But by making the head to be shared by more than one impellers, the specific speed for each impeller will be better. On the other hand, high head would be beyond the range of a single-stage, high specific speed mixed flow or axial flow pump. Multi-staging would make the head attainable, as is typically seen in vertical turbine pumps. In multi-stage construction, the flow out of one impeller is carried to the suction of the next impeller, with some conversion of the kinetic energy into pressure-energy in a bowl or a diffuser. In single-stage pumps the energy conversion is achieved in a volute casing around the impeller. For ease of access to the internals the volute casing is often made of the axially split type. This facilitates accessing all the rotating parts for cleaning or repairs, without disturbing the fixation of the pump with the adjoining suction and delivery piping.

9.7.5 Computation of the Total Head of Pumping

The total head of pumping has to be calculated taking note of four factors. Firstly, the difference between the static level of the liquid in the suction sump i.e. the wet well and the highest point on the discharge side makes the potential or static head. Secondly, the rate of flow and the size of the discharge-mouth determine the velocity at the point of discharge and in turn the kinetic or the velocity head. Thirdly, the difference in the pressures on the liquid in the suction sump and at the point of delivery make the pressure head. On the suction side, the liquid in the wet well is open to the atmosphere,but on the delivery side when delivering into a closed conduit sewer, there would be a potential head at the point of delivery, against which the pump will have to deliver. So, the delivery pressure will be higher than atmospheric. The pressure-differential will make the pressure head. Lastly, the pump has to generate as much head as is needed to compensate for the frictional losses across the pipes, valves, bends and all such appurtenances both on the suction and delivery sides. This makes the frictional head.

With the pumps running and if the discharge of the pumps is more than the inflow, the level of the liquid in the wet well would keep falling. By this the potential head component in the total head would keep increasing. Converse will be the case when the inflow is more than the discharge by the pumps.

Throttling of the delivery valve causes a change in the rate of flow and in turn a change in the velocity head which varies in square proportion of the velocity, because the velocity head is computed as $V^2/2g$.

The frictional losses also vary in square proportion of the velocity or flow-rate.

9.7.5.1 System Head

At the stage of planning, the method of computing the total head of pumping should be to estimate it over a range of flow-rates, for different variations in the static levels and for different options of piping sizes and layouts. This obtains the system head curve, as illustrated in Fig.9.2.

With an increase only in the potential head, the new system head curve will be a curve shifted parallel upwards, as shown in Fig.9.3.

For a smaller size of piping, the parabolic portion in the system head curve will be steeper, as shown in Fig.9.4.

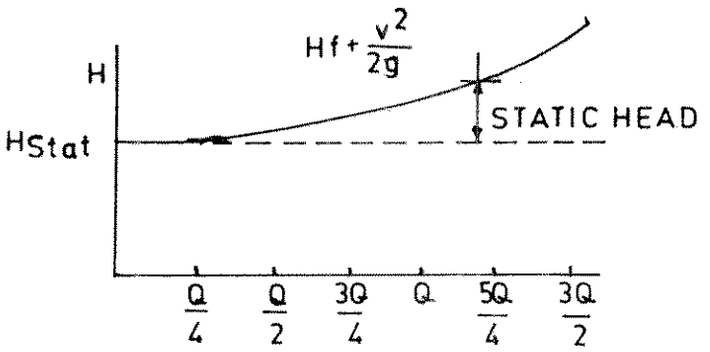

FIG.9.2:SYSTEM-HEAD CURVE FOR A PUMPING SYSTEM

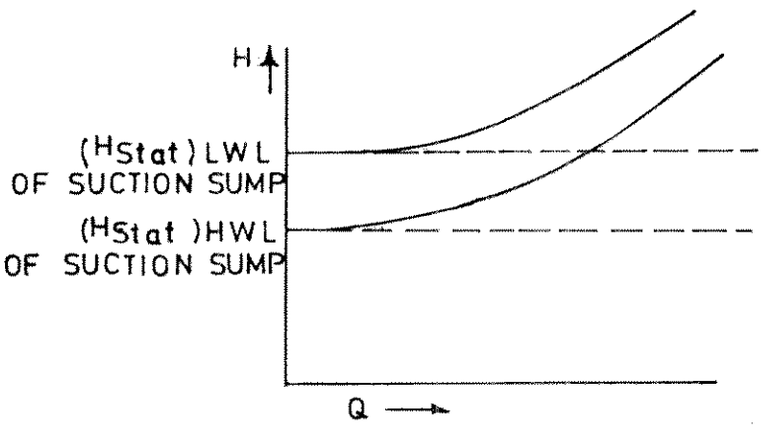

FIG.9.3:SYSTEM-HEAD CURVES FOR LWL & HWL IN SUCTION SUMP

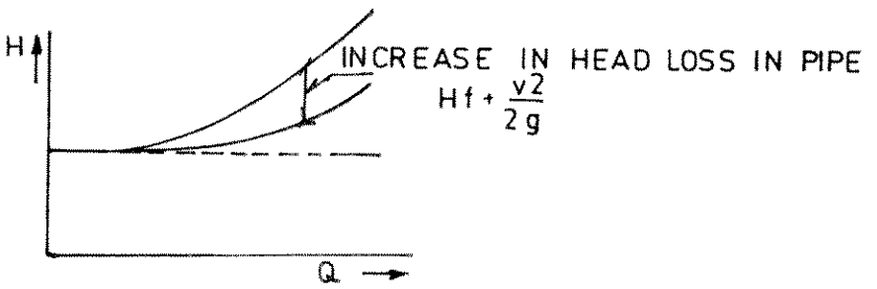

FIG.9.4:SYSTEM-HEAD CURVES WITH CHANGE IN PIPE-SIZES

From the system head curves, one knows what the total head would be for the most average operating condition, which then can be specified as the total head of pumping.

9.7.5.2 Operating Point of a Centrifugal Pump

The Head-Discharge (H vs Q) characteristics of a centrifugal pump is a drooping parabola, with the pump discharge being less when the head is more. When the pump is put into a system, it meets the head as demanded by the system. The system demand is as per the system-head curve. The head met by the pump is as per its H-Q curve. For example, by throttling the delivery valve to close, the system head curve would become a steeper parabola and would intersect the H-Q curve of the pump at a point of higher head and less discharge, such becoming the new operating point of the pump. This is illustrated in Fig.9.5.

9.7.5.3 Parallel Operation

When more than one pump would be discharging into a common closed conduit or header, the performance characteristics of the pumps suffer mutual influences. Pumps discharging into a common closed header/conduit are said to be running in parallel. The flow obtained in the header is what is contributed by all the running pumps together. The combined characteristics of pumps running in parallel is obtained by reading against different heads, the values of the Q obtainable from the individual pumps and plotting the addition of the Q-values against respective heads, as illustrated in Fig.9.6. The operating point of parallel operation is the point of intersection of the combined H-Q curve with the system head curve. Because the point of intersection on the combined characteristics is at a head higher than that at the point of intersection on the H-Q curve of a single pump, the discharge at the operating point of intersection on the H-Q curve of a single pump. From this it is clear that two identical pumps put into parallel operation will give discharge less than the double the discharge of only one pump operating. That means that to double the discharge capacity of pumping, it is not adequate to commission two pumps in parallel operation. One must study what combination of pumps of different H-Q characteristics can give such combined characteristics as to have an intersection on the combined characteristics at the desired double discharge.

As seen from Fig.9.6, if there are two identical pumps running in parallel, individual pump would be contributing a discharge Qp. If one of the pumps would trip the system would have only one pump running and giving a discharge Q1, which is more than Qp. At higher discharge, the pump would draw more power, which should not overload its motor. While putting the pumps into parallel operation, it is sound logic hence to provide that the discharge Qp in parallel operation would be somewhat to the left of the discharge at the best-efficiency-point (b.e.p.) of the pump, such that in the event of tripping of any other pump/s, the higher discharge such as Q1 of the running pump will only be nearer to its b.e.p.

9.7.5.4 Stable Characteristics

It is possible that on the H-Q curve of a centrifugal pump, the shut-off head will not be the maximum head, as shown in Fig.9.7.

Such H-Q curve is called unstable, because at heads higher than the shut-off head, the discharge of the pump keeps hunting between two values, causing the pump's performance to be unstable. Such instability is prone to cause the pump to even suffer vibrations. This becomes more hazardous in parallel operation, because the hunting of flow of the unstable pump causes the other pumps also to experience continuous change in their share and in turn hunting, instability and vibrations. Pumps to be put into parallel operation should hence be only of stable H-Q curve or care should be taken that the system head will definitely be safely less than the shut-off head of the pump with unstable curve.

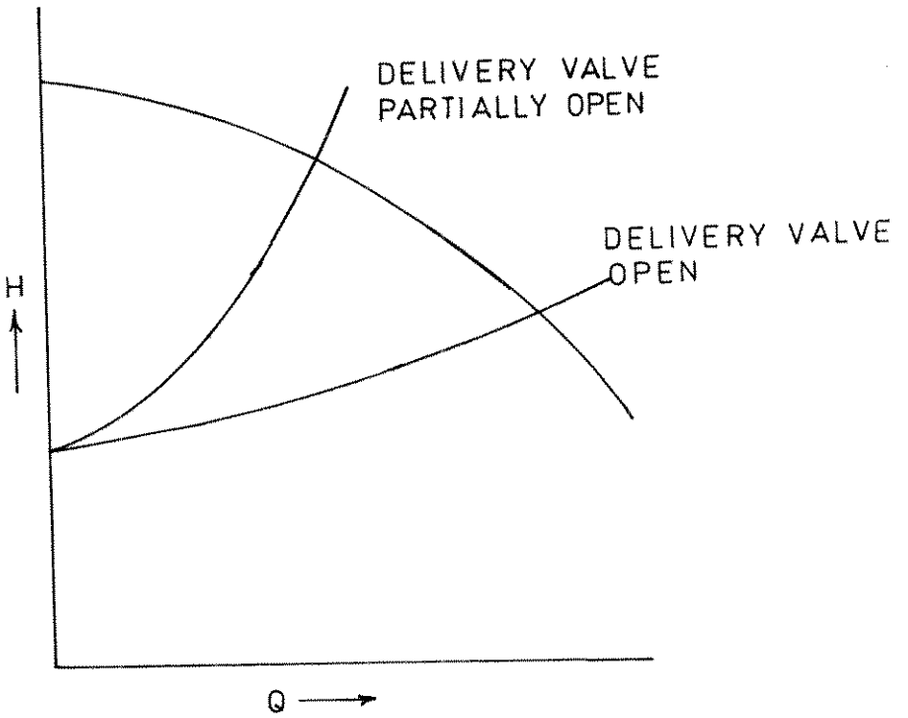

FIG.9.5: CHANGE IN OPERATING POINT BY OPERATION OF DELIVERY VALVE

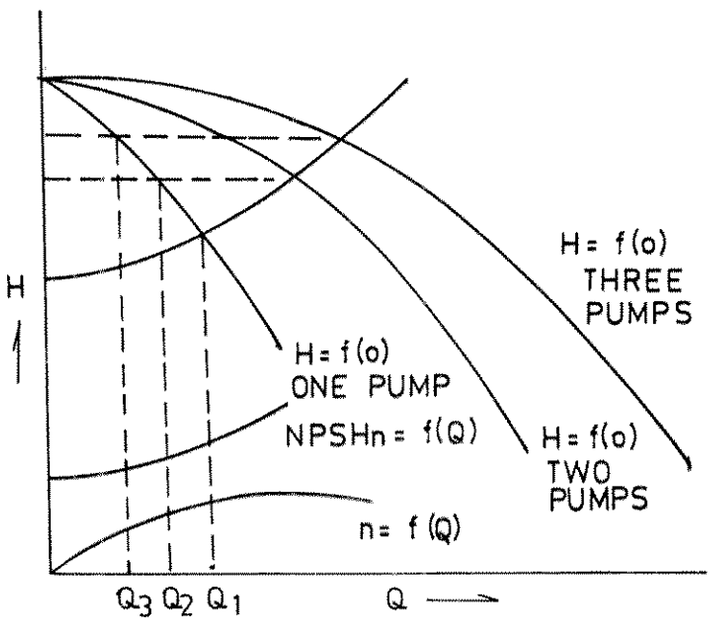

No. OF PUMPS IN OPERN.	FLOW OF EACH PUMP.
1	Q_1
2	Q_2
3	Q_3

FIG.9.6: OPERATION OF PUMPS IN PARALLEL

9.7.5.5 CAVITATION

The flow must reach the eye of the impeller with such absolute pressure-head, that it will be higher than the vapour-pressure and the nett positive suction head required (NPSHr) by the pump. The absolute pressure-head of the flow, as it reaches the eye of the impeller can be found by deducting from the pressure on the liquid in the suction sump, which is atmospheric in the case of an open sump such as the wet well, firstly, the static head between the liquid level in the suction sump, which is atmospheric in the case of an open sump such as the wet well, firstly, the static head between the liquid level in the suction sump and the centre-line of the pump, if the pump's centre line is above the liquid-level, i.e. if there is a suction-lift. If the centre-line of the pump is below the liquid level, i.e. if the suction is flooded, the static head will have to be added and not deducted. Next, the velocity-head, appropriate to the suction-size will have to be deducted. Also, the frictional losses upto the eye of the impeller will also have to be deducted. Even if the flow has a positive absolute pressure, after all the deductions, while reaching the eye of the impeller, the flow suffers from shocks, twists, turns and turbulances at the eye of the impeller. This tax on the energy in the flow is called as the nett positive suction head required ($NPSH_r$) of the pump. So, the positive absolute pressure of the flow, as it reaches the eye of the impeller should be more than the vapour pressure (V_p) even after providing for $NPSH_r$.

This means:

(Pressure head at the eye of the impeller) > ($NPSH_r + V_p$)

i.e.(Pressure head at the eye of the impeller-V_p) > ($NPSH_r$)

The value in the parenthesis now on the left is termed as the $NPSH_a$, i.e. Nett Positive Suction Head available. $NPSH_a$ can hence be derived as follows:-

$NPSH_a$ = Pressure on liquid in the suction sump $\pm$ Static head between the liquid level in the suction sump and the centre line of the pump - velocity head - frictional losses upto the eye of the impeller - vapour pressure

If the $NPSH_a$ be not greater than $NPSH_r$, vapour bubbles get formed, which while travelling along the flow, being compressible receive energy from the impeller which builds up the pressure inside them and the resultant compression reduces their volume culminating in the collapse of the bubbles with sudden release of the energy. This causes impact and vibrations. All this phenomenon is called cavitation. Cavitation can cause very serious damages. The simple clue to avoid cavitation is to ensure that $NPSH_a$ will be more than $NPSH_r$. The formula given above for $NPSH_a$, suggests many possibilities of keeping $NPSH_a$ as high as possible.

9.7.6 Progressive Cavity, Helical Rotor Pumps

These are positive displacement type pumps. Their H-Q characteristics is hence virtually a vertical straight line, parallel to the y-axis for the head of the pump. This means that the pumps would develop head upto the point of delivery, if it is open. If any positive displacement is worked with its delivery closed, the pump will keep developing very high pressures, limiting only by the capacity of the drive motor. To safeguard against such high pressures being developed, all positive displacement pumps, which have to deliver into a system with a dead end or into a system, which may get blocked and become a dead-ended system, have to be provided with a pressure-relief safety valve.

The progressive cavity helical rotor pumps have a helical rotor and a rubber stator. There are no valves. The pumps can handle liquids with solids. The discharge of the pumps can be varied by varying the speed of the pump. The pumps have a self-priming capability by virtue of being of the positive-displacement type. However, the rubber stator needs to be wetted before starting up the pump. Alternatively, the pump-end can be submerged into the liquid to be pumped, keeping the motor on the surface. The rubber stator is the most wear-prone component of the pump.

9.7.7 Installation of Pumps

The procedure of installation depends upon whether the pump is to be mounted horizontally or vertically. Most pumps to be mounted horizontally are supplied by the manufacturers as a wholesome, fully assembled unit. However, pumps to be mounted vertically are supplied as sub-assembled. For the installation of these pumps, the proper sequences of assembly has to be clearly understood from the manufacturers' drawings.

The installation of a pump should proceed through five stages in the following order:-

- Preparing the foundation and locating the foundation bolts
- Locating the pump on the foundation bolts, however resting on levelling wedges, which permit not only easy levelling but also space for filling in the grout later on
- Levelling
- Grouting
- Alignment

The foundation should be sufficiently substantial to absorb vibrations and to form a permanent, rigid support for the base plate. A typical foundation is illustrated in Fig.9.8.

The capacity of the soil or of the supporting structure should be adequate to withstand the entire load of the foundation and the dynamic load of the machinery. As mentioned in clauses 6.2.2 and 6.2.3 of IS:2974 (Part-IV) 1979, the total load for the pumpset and foundation should include the following:-

a) constructional loads

b) three times the total weight of the pump

c) two times the total weight of the motor

d) weight of the water in the column pipe

e) half of the weight of the unsupported pipe, connected to the pump-flanges.

If the pumps are mounted on steel structures, the location of the pump should be as nearest as possible to the main members (i.e. beams or walls). The sections for structural should have allowance for corrosion also.

A curb-ring or a sole-plate with machined top should be used as a bearing surface for the support flange of a vertical wet-pit pumps. The mounting face should be machined, because the curb-ring or sole-plate is used to align the pump. Fig.9.9 shows typical arrangement with curb-ring and with sole-plate. Pumps kept in storage for a long time should be thoroughly cleaned before installation.

Submersible pumps with wet type motors should be filled with water and the opening should be properly plugged after filling the water.

Alignment of the pumpsets should be checked, even if they are received aligned by the manufacturer. The alignment should be proper both for parallelism (by filler guage) and for co-axiallity (by straight edge or by dial gauge). During all alignment-checks, both the shafts should be pressed hard, over to one side, while taking readings. Alignment should be also checked after fastening the piping and thereafter, periodically during operation.

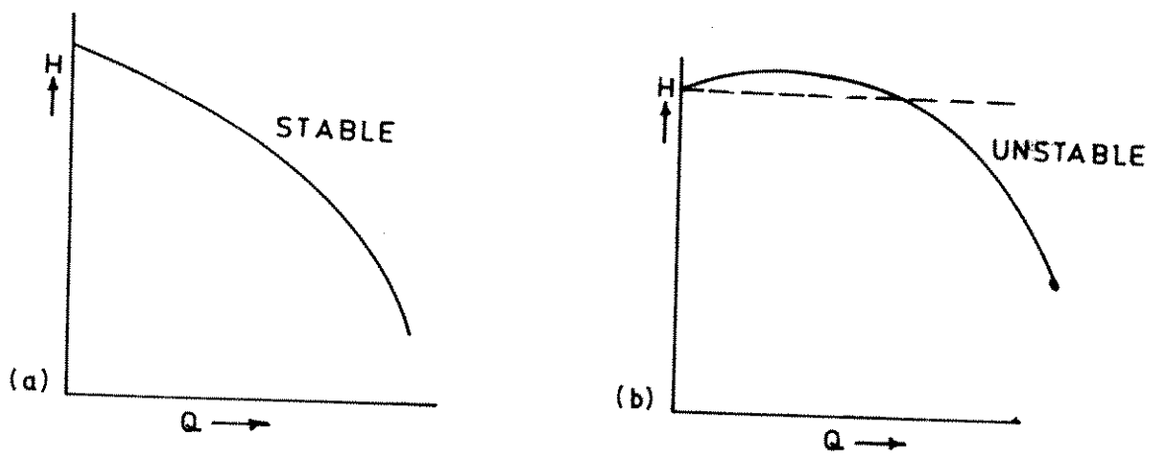

FIG.9.7: STABLE & UNSTABLE CHARACTERISTICS OF CENTRIFUGAL PUMPS

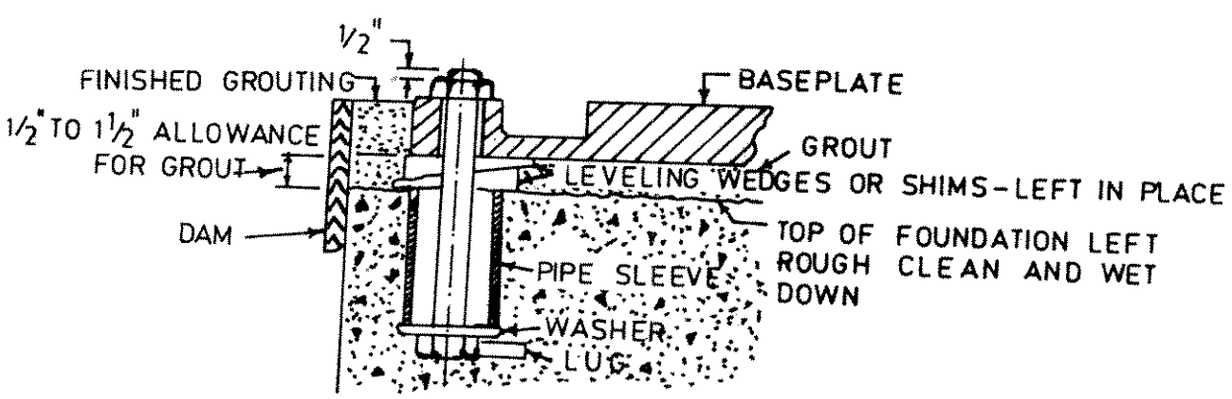

FIG.9.8: TYPICAL FOUNDATION FOR A PUMP

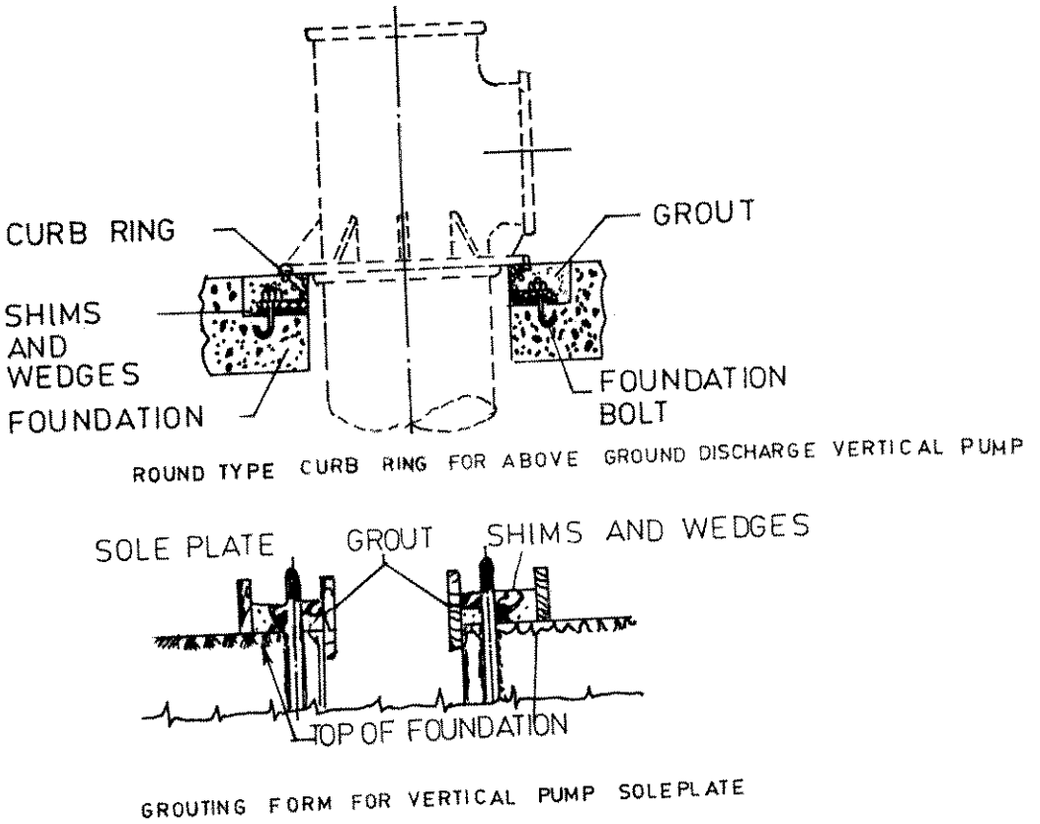

FIG.9.9: FOUNDATION FOR VERTICAL PUMPS

9.7.8 Operation of the Pumps

Dry running of the pumps should be avoided. Centrifugal pumps should be started only after priming.

Helical rotor pumps, although they are self-priming, being of the positive displacement type, need the rubber-stator to be wetted before starting.

It should be ensured that the direction of the motor agrees with the arrow on the pump.

Pumps should be operated only within the recommended range on the H-Q characteristics of the pump.

Operation near to the shut-off head of the pump should be totally avoided, as recirculation within the pump will cause overheating.

Whether a pump should be started with the delivery valve open or closed has to be decided by studying their power-characteristics. Pumps of low and medium specific speeds draw more power as the flow increases. So to minimise the load on the motor at the time of starting, such pumps are started with the delivery valve closed. Conversely, pumps of high specific speed drawn more power at shut-off. These pumps should hence be started with the delivery valve open.

While stopping, the position of the delivery valve should be as at the time of starting.

When pumps are to operate in parallel, the pumps should be started and stopped with time-lag between two pumps. The time-lag should be adequate to let the pressure-gauge stabilise.

The delivery valve should be operated gradually, to avoid surges.

When pumps are to operate in series, they should be started and stopped sequentially, but with minimum time-lag as possible. Any pump, next in sequence should be started immediately after the delivery valve of the previous pump is even partly opened.

Due care should be taken to keep the air-vent of the pump, next in sequence, open, before starting that pump.

The stuffing box should let a drip of leakage to ensure that no air is passing into the pump and that the packing is getting adequate water for cooling and lubrication.

When the stuffing box is grease-sealed, adequate refill of the grease should be maintained.

The running of the duty-pumps and of the standbys should be so scheduled that all pumps are in ready-to-run condition.

9.7.9 Maintenance of Pumps

The maintenance schedule should enlist items to be attended to at different periods, such as daily, semi-annually, annually, and others

9.7.9.1 Daily Observations

i) Leakage through packings
ii) Bearing temperature
iii) Whether any undue noise or vibration
iv) Pressure, voltage and current readings.

9.7.9.2 SEMI-ANNUAL

i) Free movement of the gland of the stuffing box

ii) Cleaning and oiling of the gland-bolts

iii) Inspection of packing and repacking, if necessary

iv) Alignment of the pump and the drive

v) Cleaning of oil-lubricated bearings and replenishing fresh oil. If bearings are grease-lubricated, the condition of the grease should be checked and replaced to correct quantity, if necessary.

An anti-friction bearing should have its housing so packed with grease, that the void spaces in the bearings and the housing be 1/2 to 2/3 filled with grease. A fully packed housing will cause the bearing to overheat and will result in reduced life of the bearing.

9.7.9.3 ANNUAL INSPECTION

i) Cleaning and examination of all bearings for flaws developed, if any

ii) Examination of shaft-sleeves for wear or scour

iii) Checking Clearances

Clearances at the wearing rings should be within the limits recommended by the manufacturer. Excessive clearances mean a drop in the efficiency of the pump. If the wear is on only one side, it means mis-alignment. Not only that the mis-alignment should be set right, but also the causes for the disturbance of the alignment should be investigated and the clearances have to be redeemed to the values recommended by the manufacturers. If the clearance on wear is seen to be 0.2 or 0.25mm more than the original clearance, the wearing ring should be renewed or replaced to get original clearance.

iv) Impeller-hubs and vane-tips should be examined for any pitting or erosion

v) End-play of the bearings should be checked

vi) All instruments and flow-meters should be re-calibrated

vii) Pump should be tested to determine, whether proper performance is being obtained

viii) In the case of vertical turbine pumps, the inspection can be bi-annual. Annual inspection is not advisable, because it involves disturbing the alignment and clearances.

9.7.9.4 FACILITIES FOR MAINTENANCE AND REPAIRS

i) Consumable and Lubricants

Adequate stock of such items as gland packings, belts, lubricating oils, greases should be maintained

ii) Replacement spares

To avoid downtime, a stock of fast-moving spares should be maintained. A set of recommended spares, for two years of trouble-free operation should be ordered along with the pump

iii) Repair Work-shop

The repair work-shop should be equipped with

a) tools such as bearing-pullers, clamps, pipe-wrenches, and others

b) general-purpose machinery such as welding set grinder, blower, drilling machine, and others.

9.7.10 Trouble-Shooting

Guidelines for diagnosing the causes of troubles likely to arise during the operation of pumps are detailed in the paragraphs 9.7.10.1, 9.7.10.2 and 9.7.10.3. Corrective action to eliminate the causes would be the appropriate remedial measures.

9.7.10.1 CHECK CHART FOR CENTRIFUGAL PUMP TROUBLES

a) Symptom 1: No flow from the pump

1.	Pump not primed	2.	Priming inadequate or improper
3.	Suction lift too high	4.	Air pocket in suction
5.	Suction inlet open	6.	Speed too low
7.	Reverse rotation	8.	System Head is too high
9.	Discharge line clogged	10.	Improper parallel operation

b) Symptom 2: Less flow from the pump

1.	Priming inadequate/improper	2.	Suction lift too high
3.	Inadequate margin on NPSHr	4.	Excess air/gas in liquid
5.	Air pocket in suction line	6.	Air leaks into suction
7.	Air through stuffing box	8.	Footvalve too small
9.	Footvalve clogged	10.	Suction inlet open
11.	Speed too low	12.	System Head is high
13.	Improper parallel operation	14.	Ingress of foreign matter
15.	Wearing rings worn	16.	Impeller damaged
17.	Casing gasket defective		

c) Symptom 3: Less pressure

1. Speed too low
2. Reverse rotation
3. System Head too high
4. Viscosity different
5. Improper parallel operation
6. Wearing rings worn
7. Impeller damaged
8. Casing gasket defective

d) Symptom 4: Loss of prime after starting

1. Priming inadequate/ improper
2. Suction lift too high
3. Excess air/gas in liquid suction line
4. Air pocket in suction line
5. Air leaks into suction
6. Air through stuffing box
7. Suction inlet open
8. Block in lantern connection
9. Lantern out of position

e) Symptom 5: Excess Power

1. Speed too high
2. Reverse rotation
3. System Head is high
4. System Head is low
5. Denser liquid
6. Viscosity different
7. Ingress of foreign matter
8. Misalignment
9. Shaft bent
10. Rubbing in running
11. Wearing rings worn
12. Poor fitting of packing
13. Incorrect packing
14. Gland too tight

f) Symptom 6: Leakage through packing

1. Lantern out of position
2. Misalignment
3. Shaft bent
4. Scouring on shaft
5. Poor fitting of packing
6. Incorrect packing
7. Shaft runs eccentric
8. Rotor out of balance
9. Poor cooling to packing
10. Packing spills into pump
11. Dirt/grit at lantern

g) Symptom 7: Packing life is less

1.	Block in lantern connection	2.	Lantern out of position
3.	Misalignment	4.	Shaft bent
5.	Bearings worn	6.	Scouring on shaft
7.	Poor fitting of packing	8.	Incorrect packing
9.	Shaft runs eccentric	10.	Rotor out of balance
11.	Gland too tight	12.	Poor cooling to packing
13.	Packing spills into pump	14.	Dirt/grit at lantern

h) Symptom 8: Vibration or noise

1.	Priming inadequate/improper	2.	Suction lift too high
3.	Inadequate margin on NPSHr	4.	Footvalve too small
5.	Footvalve clogged	6.	Suction inlet open
7.	Operation at low Q	8.	Ingress of foreign matter
9.	Misalignment	10.	Slack foundation
11.	Shaft bent	12.	Rubbing in running
13.	Bearings worn	14.	Impeller damaged
15.	Shaft runs eccentric	16.	Rotor out of balance
17.	Axial thrust not balanced	18.	Over-lubrication
19.	Poor lubrication	20.	Wrong fitting of bearings
21.	Dirt in bearings	22.	Rusting or water in bearing
23.	Condensation at bearing		

i) Symptom 9: Fast wear of bearings

1.	Misalignment	2.	Shaft bent
3.	Rubbing in running	4.	Bearings worn
5.	Shaft runs eccentric	6.	Rotor out of Balance
7.	Axial thrust not balanced	8.	Over-lubrication
9.	Poor lubrication	10.	Wrong fitting of bearings
11.	Dirt in bearings	12.	Rusting or water in bearings

13. Condensation at bearing

j) Symptom 10: Overheat or seizure

1. Pump not primed
2. Inadequate margin on NPSHr
3. Operation at low Q
4. Improper parallel operation
5. Misalignment
6. Rubbing in running
7. Bearings worn
8. Shaft runs eccentric
9. Rotor out of balance
10. Gland too tight
11. Axial thrust not balanced

9.7.10.2 CHECK-CHART FOR RECIPROCATING PUMP TROUBLES

a) Symptom 1: Liquid end noise

1. Insufficient suction pressure
2. Partly loosing prime
3. Shocks in system
4. Improper piping
5. Air in liquid
6. Over-pressure/Over-speed
7. Broken or worn valve
8. Worn packing
9. Obstruction at valve

b) Symptom 2: Power end noise

1. Main bearings loose
2. Worn bearings
3. Low oil level
4. Plunger loose

c) Symptom 3: Overheating of power end

1. Over-pressure/over-speed
2. Low oil level
3. Main bearings tight
4. Inadequate ventilation
5. Belts too tight
6. Driver misaligned

d) Symptom 4: Water in crank-case

1. Condensation

e) Symptom 5: Leakage from crank-case

1. Worn seals

f) Symptom 6: Fast wear of packing or plunger

1. Dirty liquid
2. Dirty environment
3. Foundation not rigid, not level
4. Loose packing

g) Symptom 7: Pitting at valve-seat

1. Cavitation
2. Dirty liquid
3. Corrosion

h) Symptom 8: Valves hang up

1. Valve binding
2. Broken valve spring

i) Symptom 9: Leakage at cylinder valve

1. Over-pressure/over-speed
2. Water hammer
3. Loose cylinder plug
4. Damaged O-ring seal

j) Symptom 10: Loss of prime

1. Insufficient suction pressure
2. Lift too high
3. Leaking suction
4. Required accel head high

9.7.10.3 CHECK-CHART FOR ROTARY PUMP TROUBLES

a) Symptom 1: No flow

1. Priming improper
2. Suction partly open
3. Strainer clogged
4. Leaky footvalve
5. Suction lift too high
6. Air leaks into suction
7. Reverse rotation
8. Low speed
9. Pump worn

b) Symptom 2: Less flow

1. Air leaks into suction
2. Inadequate liquid supply
3. Excessive pressure
4. Bent drive shaft
5. Coupling off-balance
6. Relief valve chatters

c) Symptom 3: Pump runs noisy

1. Excessive pressure
2. Grit/Dirt in liquid
3. Pumps runs dry
4. Strain from piping
5. Corrosion

d) Symptom 4: Rapid wear

1. Strainer clogged
2. Suction lift too high
3. Air leaks into suction
4. Suction line under-sized
5. Low speed
6. Pump worn
7. Air leak at packing
8. Relief valve semi-open

e) Symptom 5: Excess power

1. Priming improper
2. Suction partly open
3. Air leaks into suction
4. Suction line under-sized
5. Inadequate liquid supply

f) Symptom 6: Loss of prime

1. Viscosity higher
2. Blockage in discharge
3. Bent drive shaft
4. Strain from piping
5. Packing too tight

9.8 PRIME MOVERS

The pumps used in sewage and storm water pumping stations are driven either by engines or by electric motors. The electric motors are mainly of three types viz induction (A.C.) motors, synchronous (A.C.) motors, D.C.motors. Amongst these, induction motors are the most common. Synchronous motors merit consideration when large-hp, low speed motors are required. D.C. motors are used occasionally, especially for the speed variation being electrically itself possible.

9.8.1 Selection Criteria

Type of motor has to be selected considering various criteria such as the constructional features desired, environmental conditions, type of duty, simplicity and ruggedness of construction, endurance life, working and capital costs and others

9.8.2 Constructional Features of Induction Motors

Squirrel cage motors are most commonly used. Normally the starting torque requirement of centrifugal pumps is quite low and squirrel cage motors are therefore suitable. Slip ring or wound rotor motors are to be used where required starting torque is high as in positive displacement pumps or for centrifugal pumps handling sludge. The slip ring motors are also used when the starting current has to be very low, such as 1.25 times the full load current, such regulatory limits being specified by the Power Supply Authorities.

9.8.3 Method of Starting

Squirrel cage motors when started direct-on-line (with DOL starters) draw starting current about 6 times the full load (FL) current. If the starting current has to be within the regulatory limits specified by the Power Supply Authorities, the squirrel cage motors should be provided with the star delta starter or auto transformer starter.

9.8.4 Voltage Ratings

Table 9.1 would give general guidance on the standard voltages and corresponding range of motor ratings.

TABLE 9.1
SELECTION OF MOTORS BASED ON SUPPLY VOLTAGES

Supply	Voltage	Range of Motor rating in KW	
		Min.	Max.
1 φ a.c.	230 V	0.3	2.5
3 φ a.c.	415 V	-	250
	3.3 KV	225	750
	6.6 KV	400	-
	11 KV	600	-
d.c.	230 V	-	150

N.B. When no minimum is given, very small motors are feasible.

When no maximum is given very large motors are feasible.

For motors of ratings 225 KW and above, where HT voltages of 3.3 KV, 6.6 KV and 11 KV can be chosen, the choice should be made by working out relative economics of investment and running costs, taking into consideration costs of transformer, motor, switchgear, cables and others

9.8.5 Types of Enclosure

The type of enclosure provides protection to the internals of the construction of a motor. The type of protection and the type of environment are detailed in Table 9.2

TABLE 9.2
PROTECTIVE ENCLOSURES AND TYPES OF ENVIRONMENT

Type	Environment type	Description of Environment
Screeen-protected drip proof, SPDP		Indoor, clean (dust-free) environment
Total enclosed	IP.44	Indoor, dust-prone areas
fan cooled, TEFC	IP.54	Normal Outdoor
	IP.55	Outdoor at places of heavy rainfall.

9.8.6 Class of Duty

All motors should be suitable for continuous duty i.e. class S1 as specified in IS:325. Additionally, it is recommended that motors should be suitable for minimum 3 equally spaced starts per hour. The motor should also be suitable for at least one hot restart.

9.8.7 Insulation

Class B insulation is generally satisfactory, since it permits temperature rise upto 80° C. At cool places having maximum ambient, of 30° C or less, motors with Class E insulation can also be considered.

At hot places having maximum ambient above 40° C motors with Class F insulation should be considered.

9.8.8 Margin in Brake Kilowatts (BkW)

Motors are rated as per the output shaft horsepower (Brake kilowatts, BkW). The motor rating should be selected as to provide margins over the BkW required by the pump at its operating point. The margins recommended are complied in Table 9.3.

TABLE 9.3
MARGINS FOR MOTOR-RATINGS

Required BkW of Pump	Multiplying factor to decide motor-rating
Upto 1.5	1.5
1.5 to 3.7	1.4
3.7 to 7.5	1.3
7.5 to 15	1.2
15 to 75	1.15
Above 75	1.1

9.9 ELECTRICAL EQUIPMENT

The electrical equipment selected shall be adequate, reliable and safe. The adequacy is determined by the continuous current required for the station-load and the available short-circuit characteristics of the power supply. The reliability depends upon the capability of the electrical system to deliver power, when and where it is required, under normal as well as abnormal conditions. Safety involves the protection to the plant personnel and also the safeguarding of the equipment under all conditions of operation and maintenance. None of these three aspects shall be sacrificed for the sake of initial economy. The electrical system shall be designed with such flexibility as to permit one or more components to be taken out of service at any time without interrupting the continuous operation of the station. A proper selection of voltages in the electrical system is one of the most important decisions that will affect the overall system-characteristics and the plant-performance. The station bus bar voltage shall be at the level that is most suitable for the pump-motors, which constitute the major part of the load.

9.9.1 Switch Gear

The functions of a switch gear in a distribution system include normal and fault-switching operations and equipment protection. Motor-starting function may sometimes be vested in the switch gear, but only when the required frequency of starting and stopping is low or in applications, where the motors are of such magnitude that no other equipment is suitable.

Normally outdoor substations are provided. However on considerations of public safety and for protection from exposure to environmental pollution, the substations may be indoors. Following are the essential features of a transformer substation.

1. Lightning arresters
2. Ground operated disconnecters (GOD) are provided in outdoor substation. In indoor substation, circuit breakers are provided. In case of outdoor substations of capacities 1000 KVA and above, circuit breakers should be provided in addition to GOD
3. Drop out fuses for small outdoor substations
4. Overhead bus bars and insulators
5. Transformer
6. Current transformer and potential transformer for power measurement
7. Current transformer and potential transformers for protection in substations of capacity above 1000 KVA
8. Fencing
9. Earthing.

Earthing should be very comprehensive, covering every item in the substation, and in accordance with IS:3043.

Duplicate transformer may be provided, where installation so demands.

9.9.2 Starters

Starters are of different types, viz. DOL, Star-Delta, auto-transformer and stator-rotor. Of these, the last one is used with slip-ring motors. The other three are used with squirrel-cage motors. General guidelines regarding the use of starters for squirrel cage motors are given in Table 9.4.

TABLE 9.4
GUIDELINES FOR STARTERS FOR SQUIRREL-CAGE MOTORS

Type of Starter	Percentage of Voltage Reduction	Starting Curring	Ratio of starting torque to locked rotor torques %
DOL	Nil	6 x FLC	100
Star-delta	58%	2 x FLC	33
Auto-Transformer	tap 50%	1.68 x FLC	25
	tap 65%	2.7 x FLC	42
	tap 80%	4 x FLC	64

FLC = Full Load Current.

Note: As per torque speed characteristics of the motor, the torque of the motor at the chosen percentage of reduced voltage should be adequate to accelerate the pump to the full speed.

9.9.3 Capacitors

For improvement of power factor, appropriate capacitors should be provided. Capacitors may be located in the control panel or separately.

9.9.4 Cables

Table 9.5 gives guidance on the type of cable to be used for different voltages.

TABLE 9.5
TYPES OF CABLES FOR DIFFERENT VOLTAGES

Sr.No.	Range of Voltage	Type of Cable to be used	IS Ref.
1.	1 - 230 V or 3 - 415 V	PVC insulated, PVC Sheathed	IS 1554
2.	Upto 6.6 KV	PVC insulated, PVC Sheathed	IS 1554
		Paper insulated, lead Sheathed	IS 692
		XLPF, Cross Linked, Polyethylene insulated, PVC sheathed	
3.	11 KV	Paper insulated, lead sheathed	IS 692

The size of the cable should be so selected that the total drop in voltage, when calculated as the product of current and the resistance of the cable shall not exceed 3%. Values of the resistance of the cable are available from the cable-manufacturers.

In selecting the size of the cable the following points should be considered.

1. The current carrying capacity should be appropriate for the lowest voltage, the lowest power factor and the worst condition of installation i.e. duct-condition

2. The cable should also be suitable for carrying the short circuit current for the duration of the fault. The duration of the fault should preferably be re-stricted to 0.1 s by proper relay setting.

Appropriate rating factors should be applied when cables are laid in group (parallel) and/or laid below ground.

For laying cables, suitable trenches or racks should be provided.

9.10 CONTROLS

Controls should be simple, direct and reliable. Large pumping systems may have controls that automatically start and stop the pump-units and associated valves and auxiliaries. A proper hand-operated selector switch may also be provided to avoid over-working of any one pumping unit. Liquid level controls generally employ floats, ceramic floats being preferred to metal floats as the latter are